IRB 640

Industrial Robot

MAIN APPLICATIONS
Material handling
Palletizing

Optimized for palletizing

The IRB 640 is an exceptionally fast, powerful robot optimized for palletizing. With world class cycle times and 160 kg handling capacity, this 4-axis machine has what it takes to make a real impact on the speed and efficiency of your palletizing.

You'll find the robot easy to fit into palletizing applications thanks to a large working range. The same high performance in the entire working area and 360° degree base rotation mean you have maximum freedom and flexibility in designing palletizing station layouts.

The IRB 640 is guided by the world-class S4Cplus robot controller and is easily programmed thanks to dedicated software tools.

To take full advantage of the software features that give IRB 640 its high performance, the robot is of a highly robust construction based on steel castings.

Service and maintenance

A highly developed, modular design based on standard components ensures fast, easy servicing and maintenance. Most modules and components can be replaced in less than 30 minutes thanks to standard interfaces, mechanical as well as electrical.

IRB 640

Industrial Robot

TECHNICAL DATA, IRB 640 INDUSTRIAL ROBOT

SPECIFICATION

Handling capacity	160 kg
Number of axes	4
External devices	6
Integrated signal supply	23 poles 50 V, 250 mA 10 poles 250 V, 2 A
Integrated air supply	Max 10 bar

PERFORMANCE

Position repeatability		0.4 mm	
Path repeatability at 1 m/s		1.5 mm	
Max TCP velocity on ISO-plane		>2-3 m/s	
Max TCP acceleration on ISO-plane		>10 m/s2	
Process software		PalletWare	
Axis movements			
	Axis	Working range	Max speed
Positioning	1 Rotation	360°	125°/s
	2 Arm	140°	125°/s
	3 Arm	113°	125°/s
Reorientation	4 Wrist turn	600°	270°/s

ELECTRICAL CONNECTIONS

Supply voltage	3 ph, 200-600 V, 50/60 Hz
Rated power, supply transformer	10 kVA
Power Consumption	
Max.	10 kVA
With motors off	~0.3 kVA
Electrical Safety	According to international standards

PHYSICAL

Dimensions	
Robot base	1044 x 922
Weight	
Robot	1950 kg

ENVIRONMENT

Ambient temperature	
Robot	5° C to 45° C
Relative Humidity	Max. 95 %
Degree of protection	
Robot	IP 54
Noise level	70 dB(A)
Emissions	Electro Magnetic Compatibility Certificate

Data and dimensions may be changed without notice.

WORKING RANGE AND LOAD DIAGRAM

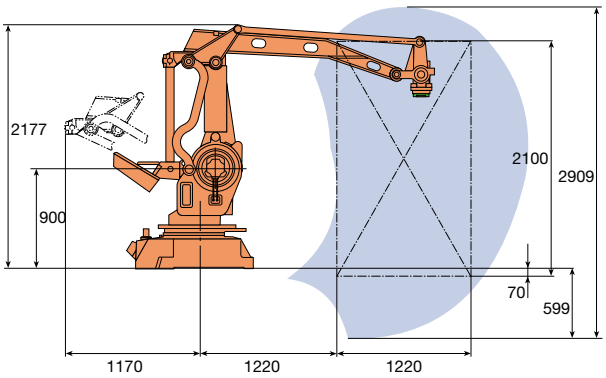

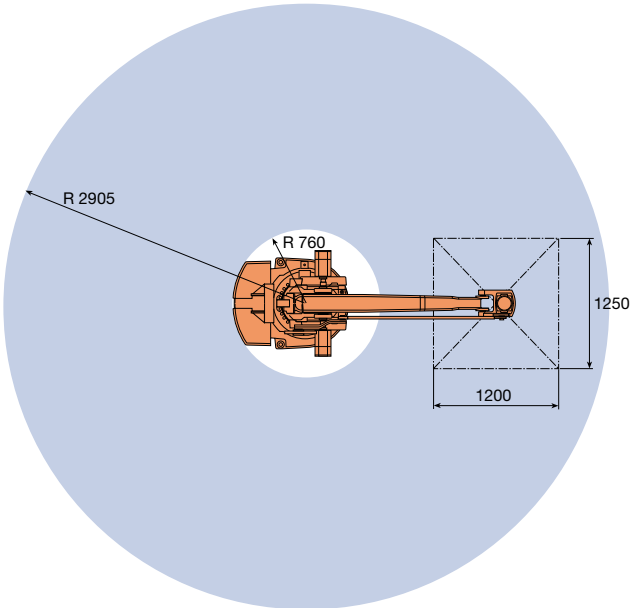

PR10037EN_R1 DEC2000

www.abb.com/robots